VARIANT BD

Product description

System support for accommodating end/corner components for the GREENLINE lifeline system.

Features/Benefits

- reinforced stainless steel version
- easy to install
- includes all necessary fastenings
- recyclable

Subfloor	concrete (quality at least C20/25, at least 120 mm thick)
Fastening	4 concrete anchors
Max. users	up to 4 people
Installation	in accordance with the assembly instruction



Approvals

- DIN EN 795:2012 + CEN/TS 16415:2017
- ETA 24/0041 (European Technical Approval)
- aBG Z-14.9-977 (general type approval)

When using these products, the relevant national legal requirements of the country in question must be observed!

Resistance to environmental factors

- Corrosion resistance class: CRC II

Impacts on the environment and health

The product does not constitute a dangerous substance within the meaning of the EU Dangerous Goods Regulation.

Safety and transport requirements

There are no specific safety or transport requirements to be observed.

Packaging | Storage conditions | Shelf life

- The product is packed in a box or on a pallet.
- Packages are not stackable.
- If stored in a dry place, it has an indefinite shelf life.

Care and maintanance

Metal parts should be cleaned by wiping them with a cotton cloth. No other cleaning methods are permitted.

Disposal

The product is recyclable in line with the principles of the material cycle. Waste must be disposed of in accordance with local regulations.

System components | Accessories



GRÜN ZUB DS-MAN D50
Vapour barrier waterproofing sleeve



GRÜN ZUB DS-MAN D50 BITU SCHIEFER
Waterproofing sleeve with slate cladding for bitumen



GRÜN ZUB ABD-MAN D50 BITU SAND
sand-coated waterproofing sleeve for bitumen



GRÜN ZUB ABD-MAN D50 PVC
Waterproofing sleeve for PVC



GRÜN ZUB ABD-MAN D50 TPO
Waterproofing sleeve for FPO/TPO

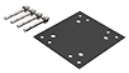

GRÜN ZUB VARIANT BD THERMOSTOP 4
Thermal isolation made from EPDM, 4 mm thick, incl. 12/20 A4 anchor bolts



GRÜN ZUB VARIANT Dämmhaube Ø 90 - 300
Insulation cover made of plastic, grey

Hersteller / Werk: GRÜN GmbH Spezialmaschinenfabrik | Siegener Straße 81 - 83 | D -57234 Wilnsdorf-Niederdielfen
Tel./Phone: +49 (0) 2 71 - 39 88-0 | Fax: +49 (0) 2 71 - 39 88-159 | www.gruen-gmbh.de | info@gruen-gmbh.de

Product information

SET	Article number	Designation	Height	Weight	
		**SYS = system support GREENLINE**			
	48501300BD	**GRÜN SYS VARIANT BD 300**	**300 mm**	**3,05 kg**	Support heights of up to 1,000 mm are available as bespoke items
	48501400BD	**GRÜN SYS VARIANT BD 400**	**400 mm**	**3,42 kg**	
	48501500BD	**GRÜN SYS VARIANT BD 500**	**500 mm**	**3,76 kg**	
	48501600BD	**GRÜN SYS VARIANT BD 600**	**600 mm**	**4,10 kg**	

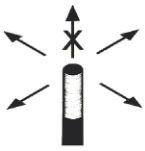

alle Maße in [mm]
all dimensions in [mm]

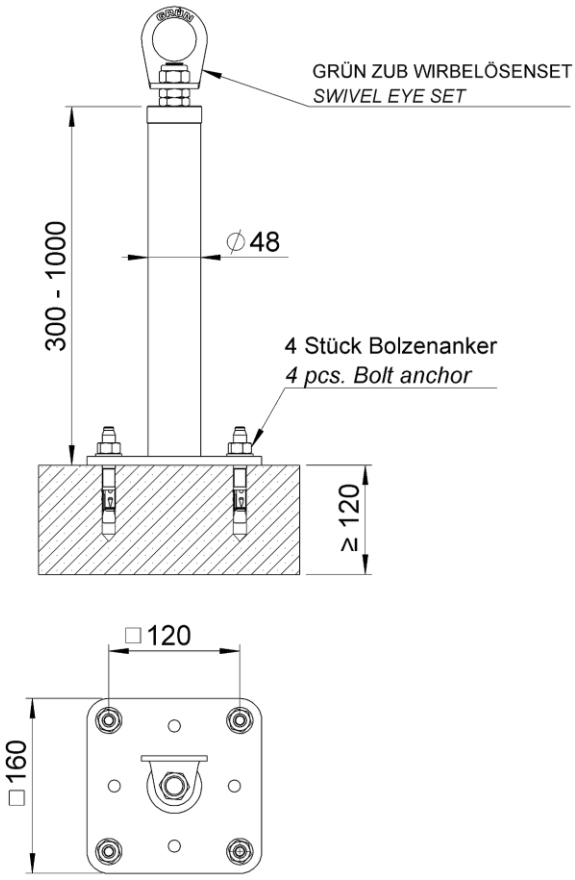

Note
Subject to errors, misprints and technical changes!
Version: PI_VARIANT_BD_en_26_11

Further information is available at:

Hersteller / Werk: GRÜN GmbH Spezialmaschinenfabrik | Siegener Straße 81 - 83 | D -57234 Wilnsdorf-Niederdielfen
Tel./Phone: +49 (0) 2 71 - 39 88-0 | Fax: +49 (0) 2 71 - 39 88-159 | www.gruen-gmbh.de | info@gruen-gmbh.de