GRÜN SYS VARIANT KT

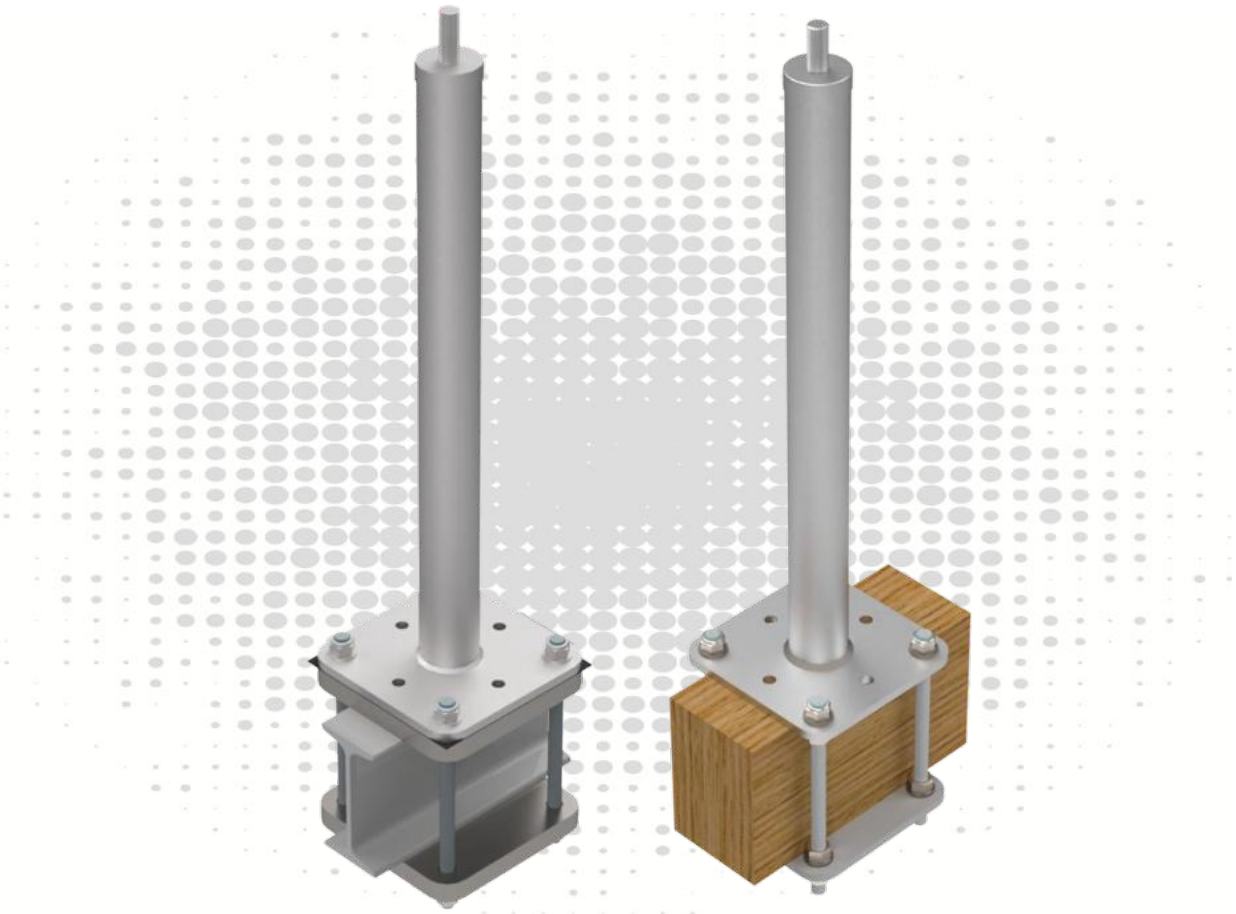

TOOLS



ATTENTION:
When using the anchor device, observe the GRÜN safety instructions.
When mounting the anchor device, observe the assembly instructions.

Contents

1 Utilisation variants 3
2 Technical data 4
3 Assembly specifications EN 795 5
3.1 Substrate requirements 5
3.2 Structure and assembly of the anchor device 5
4 Assembly specifications DIBt 6
4.1 Substrate requirements 6
4.2 Structure and assembly of the anchor device 6
5 Documentation 7
6 Product labelling 7

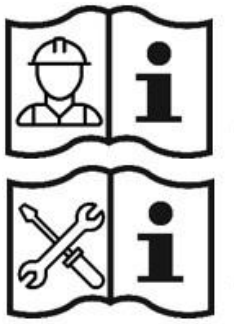

(1)

(2)

Abbreviations	Meaning
EAE	**E**inzel**a**nschlag**e**inrichtung (Single anchor device)
SYS	Seil - **Sys**tem (Lifeline system)
BEF	**Bef**estigungsset (Fixing set)
ZUB	**Zub**ehör (Accessories)

ATTENTION:

To use the anchor device, observe the GRÜN safety instructions **(1)**.
To attach the anchor device, observe the installation instructions **(2)**.

Only the installation instructions from GRÜN apply.

Only the fixing materials supplied by GRÜN are permitted to be used.

Do not replace individual parts.

GRÜN GmbH Spezialmaschinenfabrik | Siegener Straße 81 - 83 | D -57234 Wilnsdorf-Niederdielfen
Tel./Phone: +49 (0) 2 71 - 39 88-0 | Fax: +49 (0) 2 71 - 39 88-159 | www.gruen-gmbh.de | info@gruen-gmbh.de

1 Utilisation variants



GRÜN SYS VARIANT KT PLUS



GRÜN SYS VARIANT KT

SET



GK VARIANT

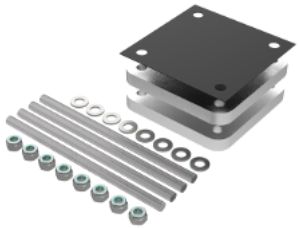

BEF VARIANT KT PLUS

SET



GK VARIANT

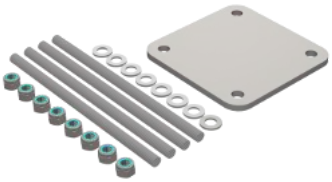

BEF VARIANT KT

2 Technical data

Product specifications:

Requirement	Test centre	Marking	User
DIN EN 795:2012 CEN/TS 16415:2017	DEKRA Testing and Certification GmbH Persönliche Schutzausrüstung/Personal Protective Equipment Dinnendahlstr. 9 44809 Bochum - Germany		
abZ/aBG Z-14.9-725	Deutsches Institut für Bautechnik (DIBt) Kolonnenstr. 30 B 10829 Berlin - Germany		

Load direction:

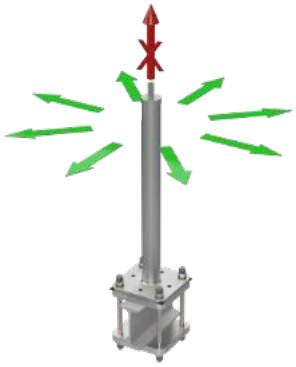

Standard construction height:	300 mm bis 600 mm
Custom lengths:	200, 700 mm bis 1000 mm
Material:	Stainless steel A2
Footplate dimensions:	160 mm x 160 mm
Hole pattern:	120 mm x 120 mm - ø14 mm
Counterplates:	Galvanised steel
Separation layer:	EPDM

The permissible height is based on abZ 14.9-725 according to sample statistic no. 15163/15.

User	Permissible total height rounded
1	800
2	700
3	600
4	500

Free support projection:

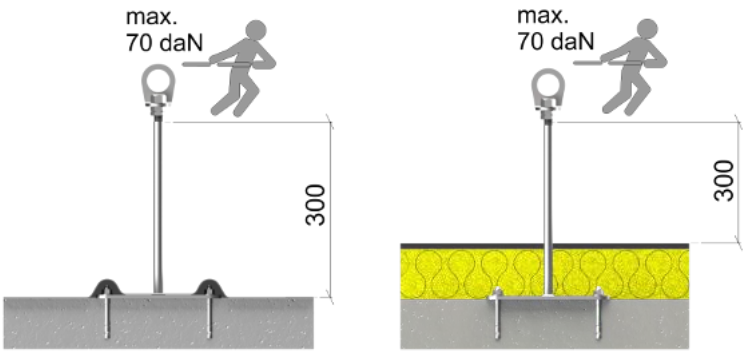

The subfloor must be part of the static basic construction.
In case of doubt, this should be checked by a structural engineer.

GRÜN GmbH Spezialmaschinenfabrik | Siegener Straße 81 - 83 | D -57234 Wilnsdorf-Niederdielfen
Tel./Phone: +49 (0) 2 71 - 39 88-0 | Fax: +49 (0) 2 71 - 39 88-159 | www.gruen-gmbh.de | info@gruen-gmbh.de

Assembly specifications according to EN795 EN 795

3 Assembly specifications EN 795

3.1 Substrate requirements

Installation must be carried out on suitable subfloors with adequate strength.
GRÜN recommendation:

Subfloor	Dimensions
Beams /Girders	min. 100 mm wide

3.2 Structure and assembly of the anchor device

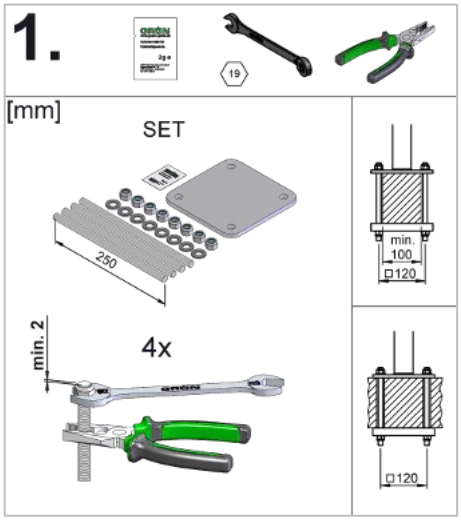

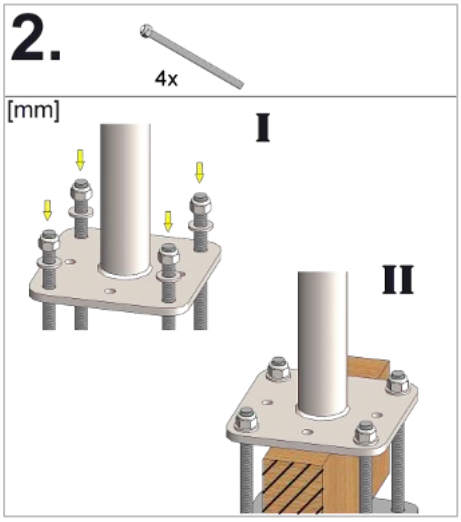

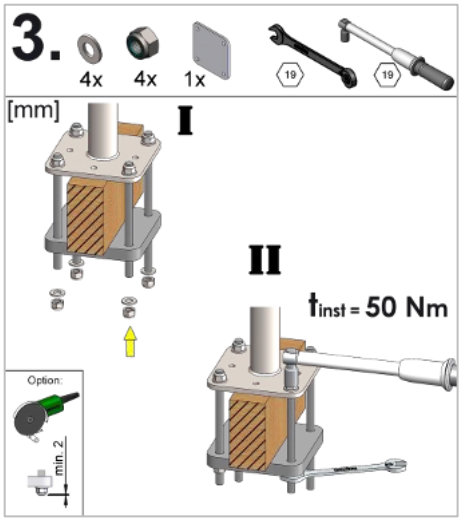

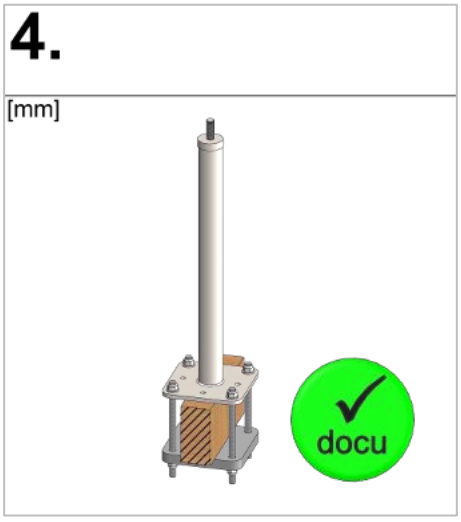

Assembly specifications according to DIBt

4 Assembly specifications DIBt

4.1 Substrate requirements

Subfloor	Dimensions
Beams / Girders	min. 60 mm wide

4.2 Structure and assembly of the anchor device

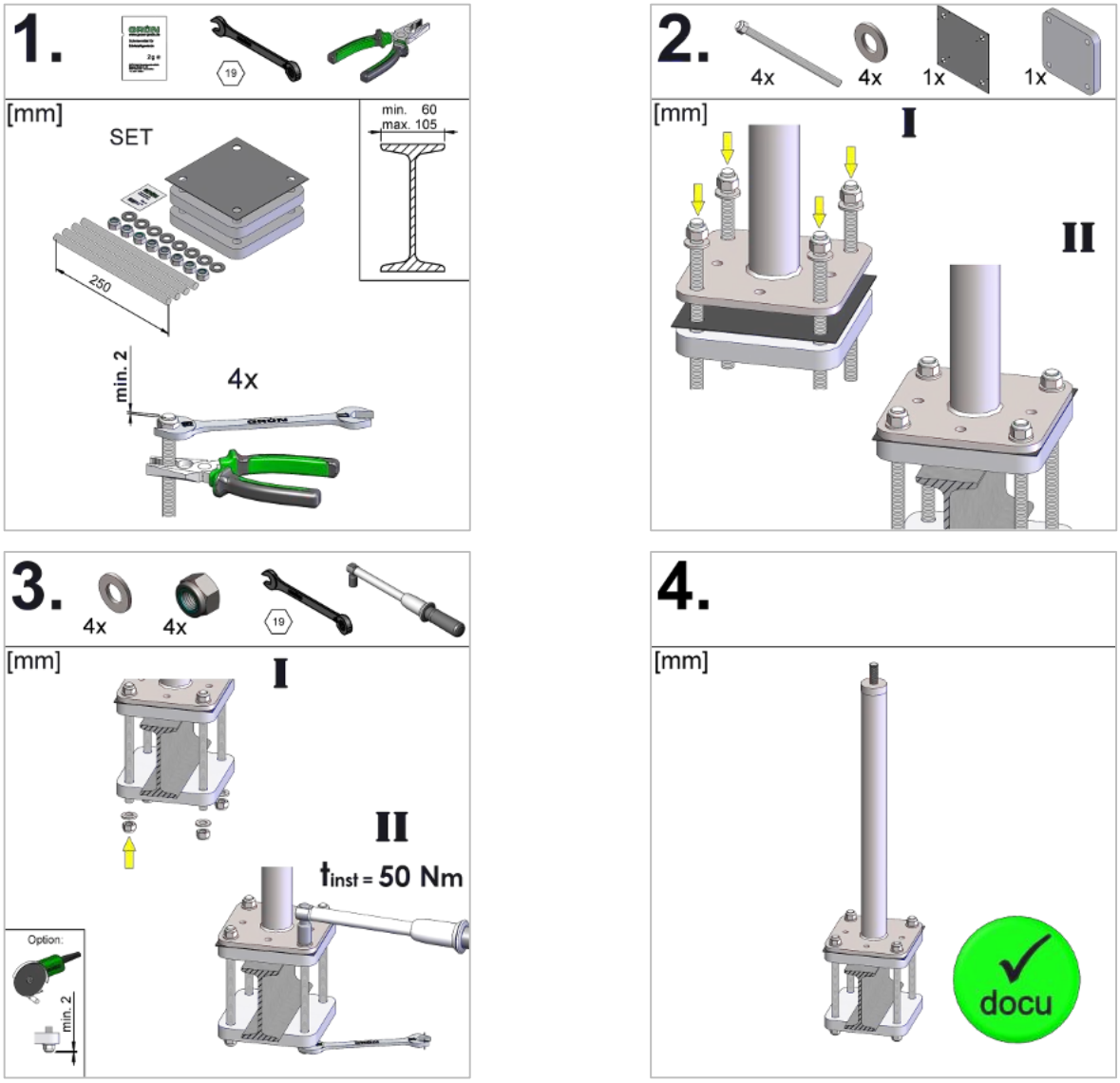

GRÜN GmbH Spezialmaschinenfabrik | Siegener Straße 81 - 83 | D -57234 Wilnsdorf-Niederdielfen
Tel./Phone: +49 (0) 2 71 - 39 88-0 | Fax: +49 (0) 2 71 - 39 88-159 | www.gruen-gmbh.de | info@gruen-gmbh.de

5 Documentation

The installer is obliged to document the installation, including photos of details that will no longer be visible.

Installation documentation and maintenance documentation form available at:
(https://gruen-gmbh.de/de/absturzsicherung/downloads/)

Digital documentation with GRÜN DOKU possible at:
(https://documentation.gruen-gmbh.de)

6 Product labelling

Type plate



Example illustration of labelling

Swivel eye (anchorage points)



Example illustration of labelling

① Manufacturer / Utilisation
② Product name
③ Observe installation instructions & safety instructions
④ Max. users
⑤ Serial number

- If the labelling of the anchorage device is no longer accessible/recognisable after installation, additional labelling must be provided in the vicinity.

MA_VARIANT_KT_en_26_11

GRÜN
Spezialmaschinenfabrik für Dach, Bau und Straße
Siegener Straße 81-83
57234 Wilnsdorf / GERMANY

Tel. +49 (0) 271 - 39 88-0
Fax +49 (0) 271 - 39 88-159
E-Mail info@gruen-gmbh.de
www.gruen-gmbh.de

Urheberrechtshinweis
© Grün GmbH 2026. Alle Rechte vorbehalten. Diese urheberrechtlich geschützten Unterlagen dürfen - auch auszugsweise - nur mit vorheriger Genehmigung der GRÜN GmbH vervielfältigt, abgeändert oder in irgendeiner Form oder irgendeinem Medium weitergegeben oder in einer Datenbank oder einem anderen Datenspeichersystem gespeichert werden. Eine Verwendung ohne vorherige Genehmigung gilt als Verstoß gegen die jeweiligen Copyright-Bestimmungen.