EN 795

GAP BD

Product description

Anchor device for securing personal fall protection equipment (PPE).

Features/Benefits

• made from stainless steel
• easy and fast to install
• wall and ceiling installation
• includes stainless steel fastening
• recyclable

Subfloor	concrete (quality at least C20/25, at least 120 mm thick)
Fastening	1 special dowel
Max. users	up to 3 people
Installation	in accordance with the assembly instruction



Approvals

• DIN EN 795:2012
• CEN/TS 16415:2017
When using these products, the relevant national legal requirements of the country in question must be observed!

Resistance to environmental factors

• Corrosion resistance class: CRC II

Impacts on the environment and health

The product does not constitute a dangerous substance within the meaning of the EU Dangerous Goods Regulation.

Safety and transport requirements

There are no specific safety or transport requirements to be observed.

Packaging | Storage conditions | Shelf life

• The product is packed in a box or on a pallet.
• Packages are not stackable.
• If stored in a dry place, it has an indefinite shelf life.

Care and maintanance

Metal parts should be cleaned by wiping them with a cotton cloth. No other cleaning methods are permitted.

Disposal

The product is recyclable in line with the principles of the material cycle. Waste must be disposed of in accordance with local regulations.

System components | Accessories

Hersteller / Werk: GRÜN GmbH Spezialmaschinenfabrik | Siegener Straße 81 - 83 | D -57234 Wilnsdorf-Niederdielfen
Tel./Phone: +49 (0) 2 71 - 39 88-0 | Fax: +49 (0) 2 71 - 39 88-159 | www.gruen-gmbh.de | info@gruen-gmbh.de

Product information

SET	Article number	Designation	Height	Weight	
	**49520200**	**EAE = single anchor device** **GRÜN EAE GAP BD**		**0,27 kg**	

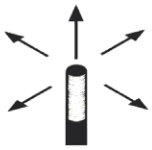

alle Maße in [mm]
all dimensions in [mm]

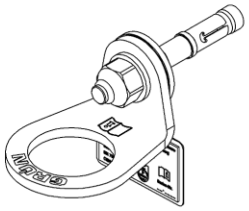

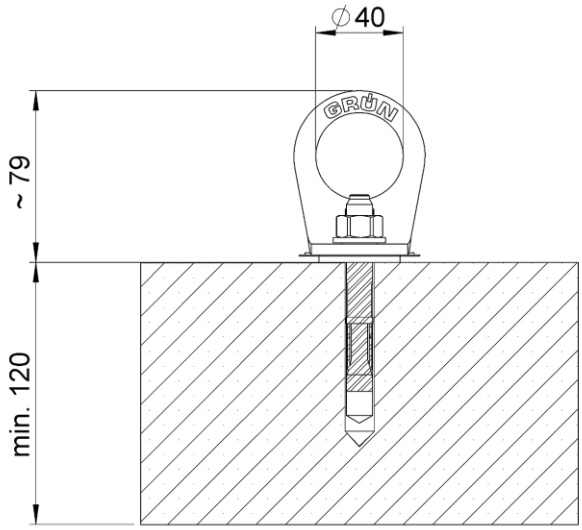

Note

Subject to errors, misprints and technical changes!

Version: PI_GAP_BD_en_26_11

Further information is available at:

Hersteller / Werk: GRÜN GmbH Spezialmaschinenfabrik | Siegener Straße 81 - 83 | D -57234 Wilnsdorf-Niederdielfen
Tel./Phone: +49 (0) 2 71 - 39 88-0 | Fax: +49 (0) 2 71 - 39 88-159 | www.gruen-gmbh.de | info@gruen-gmbh.de